IKI

Instructions for installation and use

IKI electric heaters

Pillar IKI 6,6 kW / M10066NA
Pillar IKI 9 kW / M10090NA

Intertek
5023788

Conforms to UL Std. 875

10/2024

This instruction manual is intended for the sauna owner or the person in charge of caring for the operation of the sauna, as well as for the electrician who installs the heater. When the installation is complete these instructions must be given to the owner or the person caring for the sauna. The sauna heater is intended for the sole purpose of heating the sauna room to a temperature appropriate for bathing. Its use for any other purpose is prohibited. Indoor use only.

Contact information

IKI LLC
2565 KASOTA Ave, St Paul
Minneapolis, MN 55108
Email: info@ikisaunas.com
Phone: (952) 657-3810
www.ikisaunas.com

Contents

WARNINGS 3
PRIOR TO INSTALLATION 5
Installation of the heater 6
Piling the stones 7
Wiring diagram 11
Resettable overheating fuse wiring diagram with a separate controller 11
Supply wires 12
Model table 12
Safety distances 12
Supporting the heater against a wall 13
Operating the heater timer and temperature 13
High temperature control (reset button) 14
table 6. Requirements for water quality 14
Instructions for use and maintenance 15
Troubleshooting 15
Warranty 16
Quality guarantee / Freight guarantee 17
Warning placards 17
Ventilation 18
Mechanical ventilation 18
Gravity ventilation 19
The Sauna Room 20

WARNINGS

• Keep away from the heater when it is hot. The stones and outer surface of the heater may burn your skin.
• Do not throw too much water on the stones. The evaporating water is boiling hot.
• Do not let young, handicapped or ill people bathe in the sauna on their own.
• This appliance is not intended for use by persons (including children) with reduced physical, sensory or mental capabilities, or lack of experience and knowledge, unless they have been

given supervision or instruction concerning use of the appliance by a person responsible for their safety. Children should be supervised to ensure that they do not play with the appliance.
• Consult your doctor about any health-related limitations to bathing.
• Parents should keep children away from the hot heater.
• Consult your child welfare clinic about taking small children in to the sauna.
• Do not exceed reasonable time inside the sauna without spending time outside the sauna cooling down. Reasonable time may be as little as a couple minutes or longer, depending upon such factors as body make up, conditioning, etc.
• Be very careful when moving in the sauna, as the platform and floors may be slippery.
• Do not smoke, use alcohol, or exercise in the sauna
• Do not exceed 30 min. in the sauna at one time, as excessive exposure can be harmful to health. The sauna should not be used as a testing facility for tolerance.
• Persons with poor health should consult their physicians before using the sauna.
• Do not place any combustible material over the sauna heater (towels, bathing suits, wooden bucket or ladle).
• Do not hang clothes to dry in the sauna, as this may cause a risk of fire. Excessive moisture content may also cause damage to the electrical equipment.
• Do not sleep in the sauna.

• Hyperthermia occurs when the internal temperature of the body reaches a level several degrees above the normal body temperature of 98,6 ºF. The symptoms of hyperthermia include an increase in the internal temperature of the body, dizziness, lethargy, drowsiness, and fainting.
The effects of hyperthermia include:
A. Failure to perceive heat
B. Failure to recognize the need to exit the room
C. Unawareness of impending hazard
D. Fatal damage in pregnant women
E. Physical inability to exit the room
F. Unconsciousness
WARNING – the use of alcohol, drugs, or medication is capable of greatly increasing the risk of fatal hyperthermia.

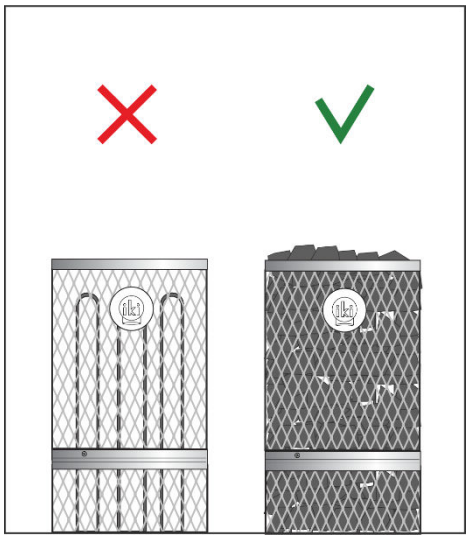

Use only clean tap water on the stones – do not use pool or spa water or seawater with salt, as chlorine gas can be produced and the heating elements can be damaged!
• No such objects or devices should be placed inside the heater rock space or near the heater that could change the amount or direction of the air flowing through the heater, thus causing the resistance temperature to rise too high, which may set the wall surfaces on fire!

Do not operate heater <u>without</u> stones or if the stones has been piled <u>incorrectly</u> so that the heating elements are visible. Wrong piling of stones causes a fire hazard!

PRIOR TO INSTALLATION

Before you begin installing the heater, pay attention to the following points in the heater:

- **Beware of the sharp edges of the stainless-steel mesh. Use a long-sleeved shirt and protective gloves during the installation and once taking the heater out of the cardboard box.**

- **Read through this installation manual and the separate control unit manual before you begin the installation of the heater.**

- **ATTN! This manual must be left with the owner, manager or operator of the Sauna after it is tested/used by an electrician.**

- **The heater volume should be suitable for the sauna room volume Model table in page 11 shows the recommended sizes for each heater power output.**

- **A precondition for the given values is that the sauna room is well insulated. Walls and ceiling are covered with wood panels.**

  • Check that supply voltage and amperes are available for the heater in the building and main power supply.

  • The breakers and the connection cables conform with valid regulations and their dimensions are in accordance with.

  • The location is suitable for the heater.

Installation of the heater

ELECTRICAL INSTALLATION (for certified electrician only)

Beware of the sharp edges of the stainless-steel mesh. Use a long-sleeved shirt and protective gloves during the installation and once taking the heater out of the cardboard box. The electric installation may only be administered by a qualified electrician adhering to current regulations.

1. After removing the heater from the cardboard box, take off the plastic wrapping from around the heater.
2. Choose the place for the heater according to the required safety distances. The installation must be carried out in the place where the heater will be situated. The safety distances for Electric IKI 6 – 9 kW are measured from the heater's mesh frame outwards **(Page 12: Safety distances).** Negligence to comply with the safety distances may cause fire hazard.
3. See applicable wiring diagram for the right heater model to be installed **(Page 11), ATTN!** Heater must be permanently installed by using seal tight conduit between the heater and the wall of the sauna room (plugs are not allowed in the sauna room). All Wiring must be done by a licensed electrician, who must follow wiring diagram provided and adhere to local regulations. Use proper AWG rated wire size and use copper wire suitable for 194 °F (90 °C) within sauna walls. Make sure that the connecting cable will not be exposed to thermal radiation or mechanical strain. If the rubber cable running inside the wall of the sauna is above 1000 mm from the floor, it needs to endure temperatures up to 170Celsius /338Fahrenheit. The use of PVC-insulated cable as a connecting cable is prohibited due to thermal embrittlement. Use grounding terminals provided in sauna heater and control unit to properly ground the equipment as per NEC and local regulations.
4. Remove the base plate **(Picture 1.)** from the bottom of the connection box of the heater and connect the five-pole electric cable to the connection strip inside the element box according to the wiring diagram **(Page 11).**
5. Once the heater is fully connected to the control unit and the house cabling, measure that all the heating elements function properly. If problems occur, contact the manufacturer's technical support**. ATTN!** When making the final inspection of the installations, a “leakage” might be detected when measuring insulation resistance. The reason for this is that the insulating material of the heating elements has absorbed moisture from the air/ transportation. After 2 -3 times
6. Close the base plate **(Picture 3.)**.
7. Make sure that the lower part of the stainless-steel mesh frame is fastened correctly **(Picture 4.)** and that it is an equal distance from all the heating elements. Check that the heating elements stand up straight and install the element guidance plate appx. 15cm (6 inches) from the top of the elements **(Picture 5. A: Element guidance plate).** If they have been bent, carefully straighten them so that the elements go smoothly through the plate.
8. Adjust the heater to level by adjusting the heater legs. Then add the sauna stones to the heater.

Piling the stones

Beware of the sharp edges of the stainless-steel mesh. Use a long-sleeved shirt and protective gloves during the installation and once taking the heater out of the cardboard box!

1. Wash the stones before piling. Olivine, olivine-diabase, peridotite or black volcanite stones are recommended stones, in sizes 2-4 inches (5-10 cm) in diameter.
2. Pile stones first to the lower part of the heater **(Picture 6.)** (Do not drop stones into the heater!). **ATTN! PILLAR 6,6 kW does not have the center joint section.** Also pile stones densely between the half round metal sheet **(Picture 7: B)** and the outer mesh. The dense layer prevents the direct heat radiation from the overheating possibly flammable materials around the heater. In the center part, between the heating elements, the stones are set more loosely that lets the air flow through the heater, resulting in a faster heating of sauna and stones. Assure that elements do not touch each other or the heater mesh frame. Make sure that the stones support the elements to stay vertically straight. **(Picture 8: A; element guidance plate / B; half round metal sheet).**
3. Once the lower part has been filled with stones, attach the upper part of the mesh frame to the lower frame. The upper part goes inside the lower part **(Picture 9.).**
4. Install the wall-mounting support metal plate between the heater and the wall by following the safety distances (**Picture 10.)**
5. Pile stones to the fill the upper part the same way as in the lower part. Make sure to support the elements with stones so that the elements stay vertically straight without touching each other or bending against each other at any point during the adding of stones. **(Picture 11.)**. You can leave the element guidance plate plate under the stones appx. 15cm (6 inches) from the top of the heating elements. Do not drop stones into the heater at any point instead pile them carefully. Be especially careful with the corners where the heating elements are near the mesh to cover the area between the elements and mesh. **A bare heating element can endanger combustible materials even outside the safety distances. Check that no heating elements can be seen behind the stones!** Do not put a high pile of stones on top of the heater **(Picture 12.**).
6. Once you have filled stones into the heater Install the safety grid on top of the heater **(Picture 13.).**
7. Install the heat/steam deflector directly on top of the heater. Tighten the plate to the ceiling by using 4 screws. That will prevent the ceiling from overheating above the heater **(Picture 14.)**.
8. Please place the metal “CAUTION” sign on the interior wall of the sauna room directly above the heater **(Picture 15.)** in a visible place (screws and nails included). Place the metal “WARNING” sign outside, on the door of the sauna room **(Picture 16.).**
9. **Note!** The use of soapstone and natural stones is allowed only on the outer edges and on the top of the heater.
10. We recommend the use of safety railings around the heater. However, the stainless-steel mesh frame does not overheat the way ordinary steel-cased heaters do.
11. The surface of the stones can settle after the heater is in use. Frequently check that the heating elements do not become exposed. If this should happen, add more stones. The disintegration of the stones depends on the type of stones and the frequency of use. The condition of the stones should be checked yearly, and broken stones must be replaced with new ones.

1.

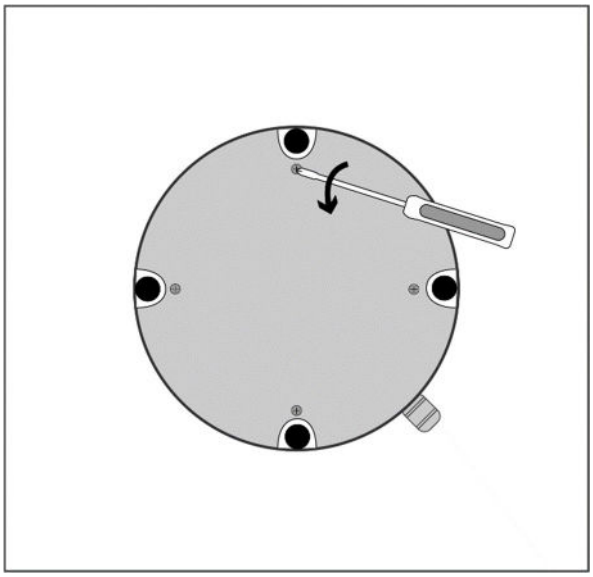

2.

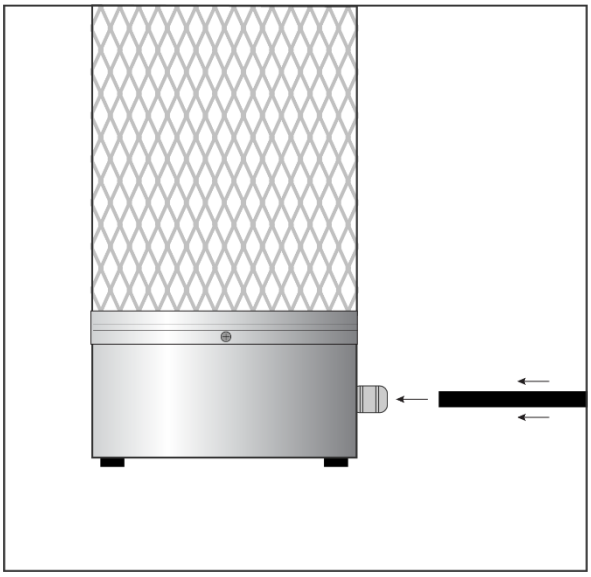

3.

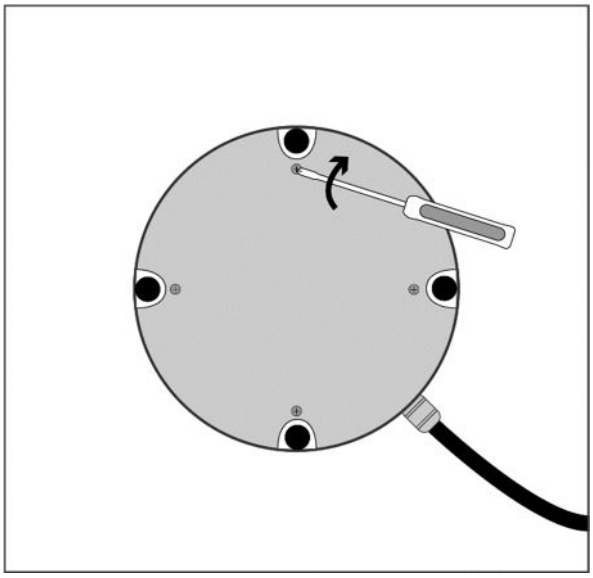

4.

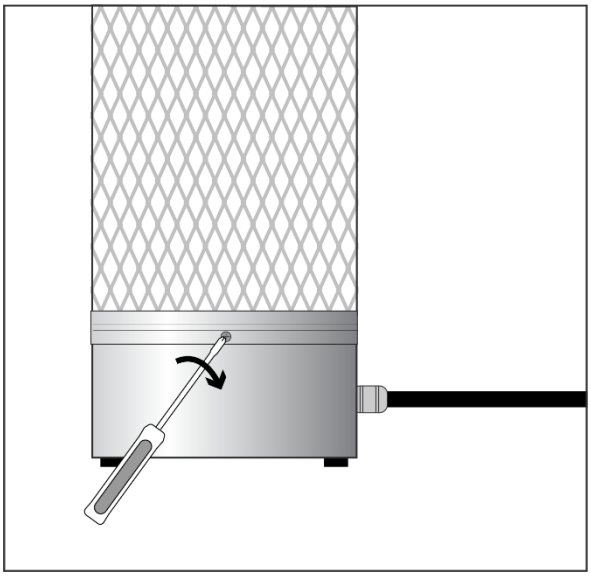

5.

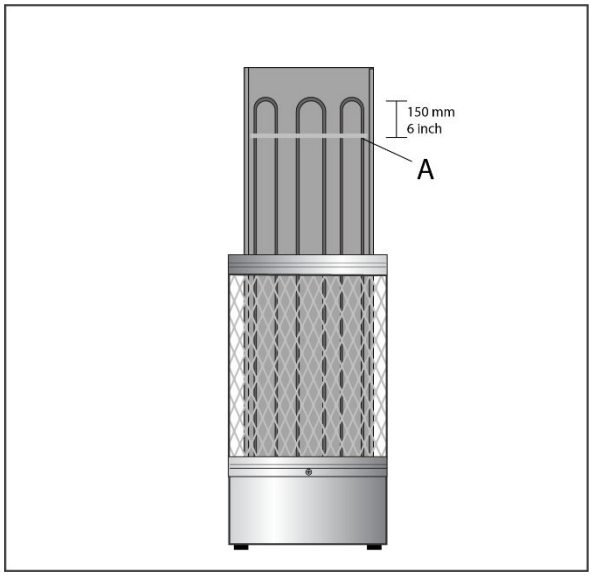

6.

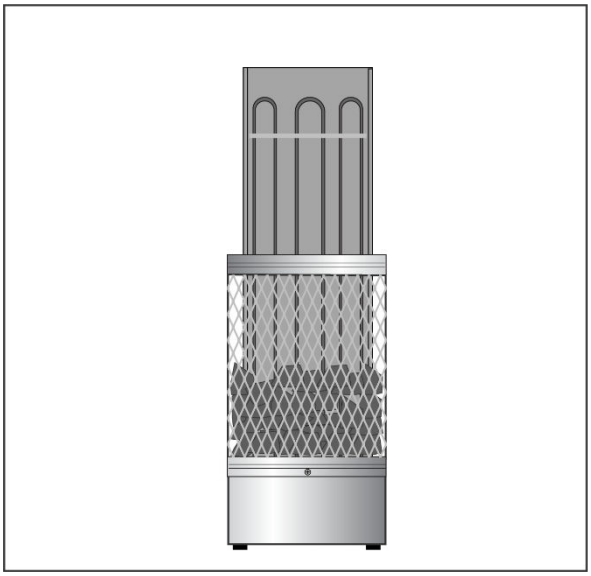

7.

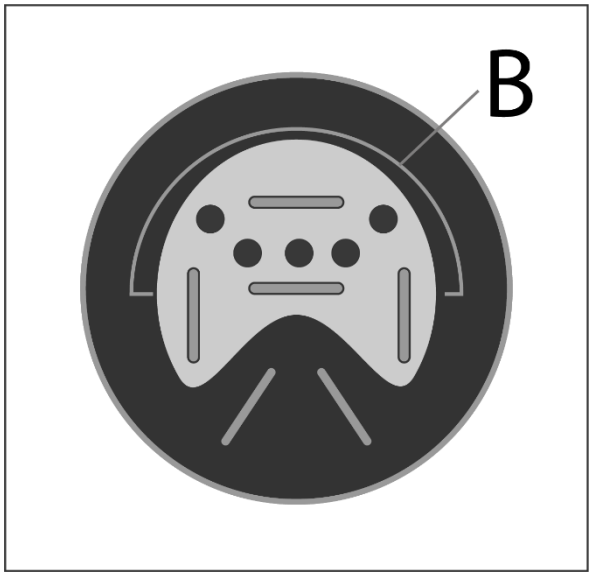

8.

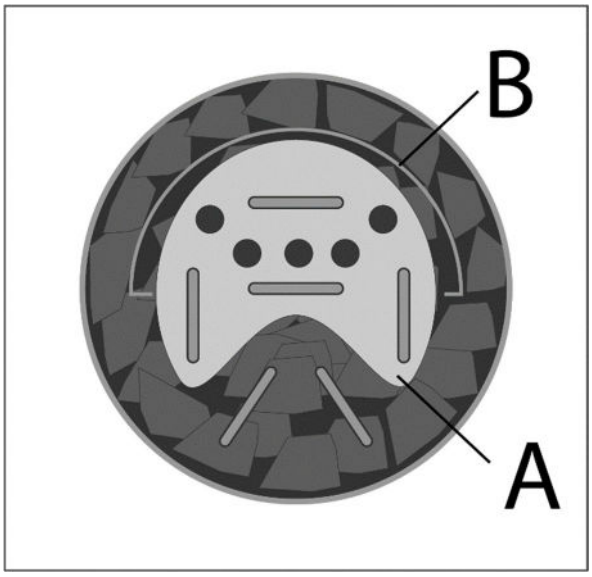

9.

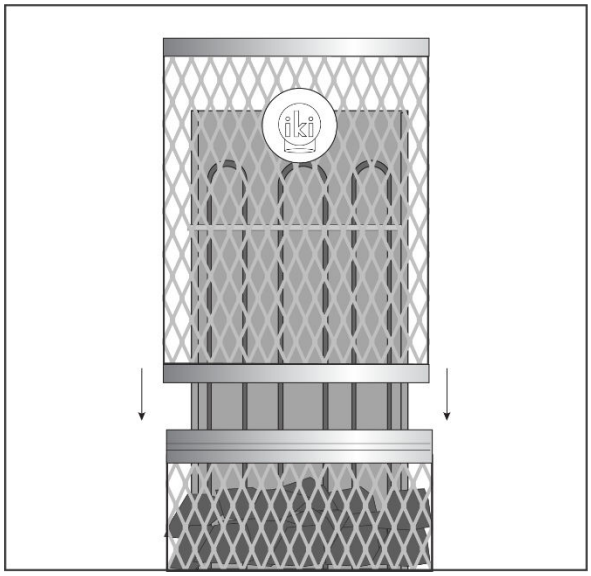

10.

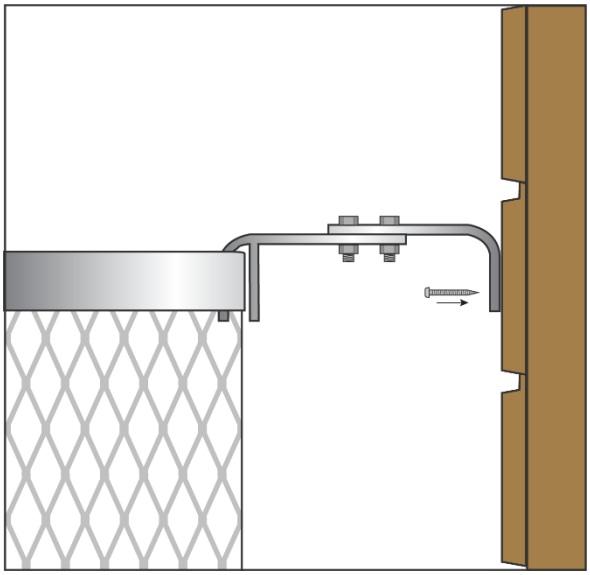

11.

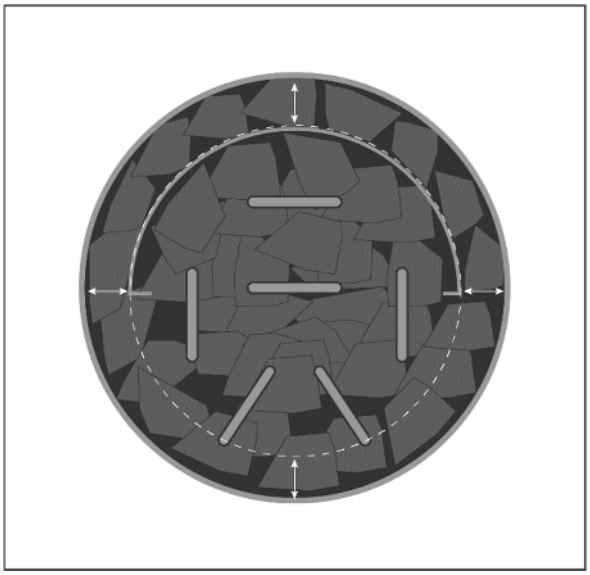

12.

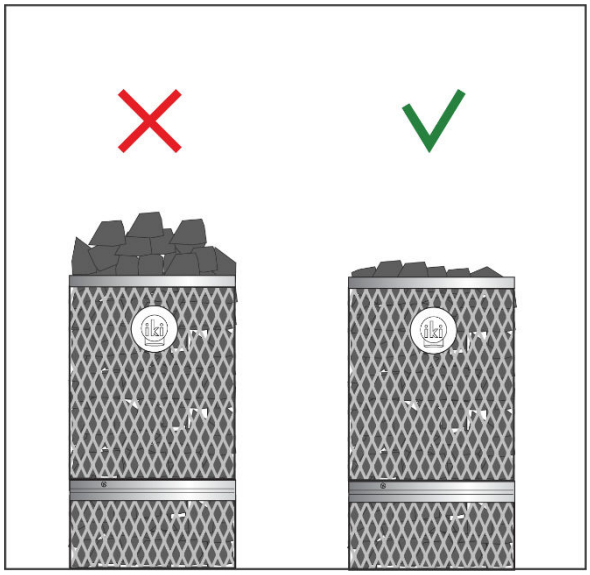

13.

14.

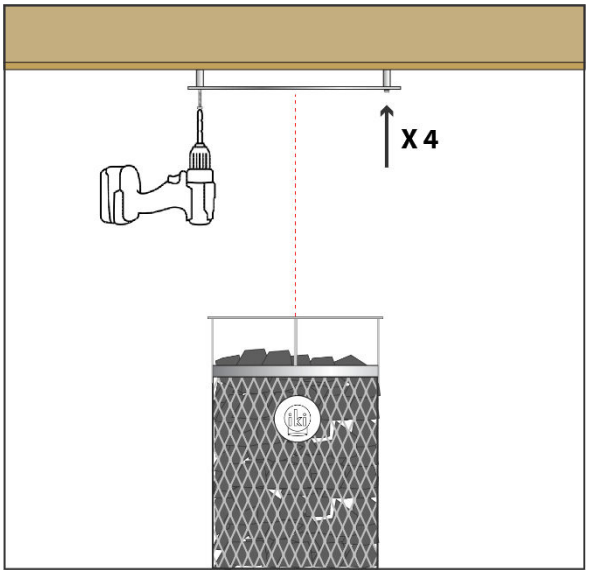

15.

16.

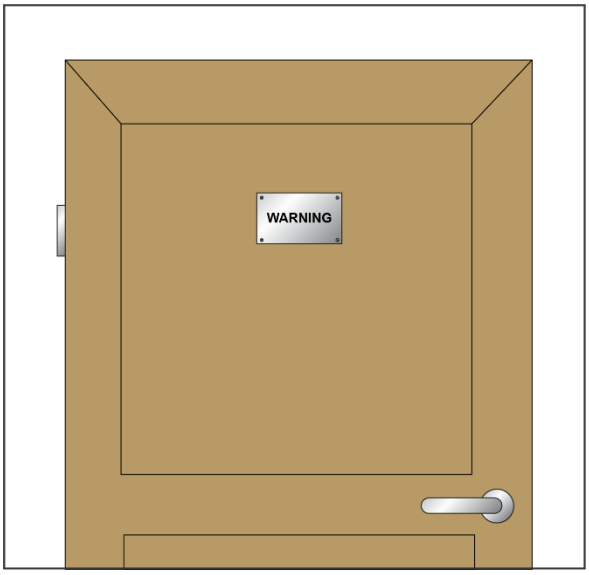

Wiring diagram

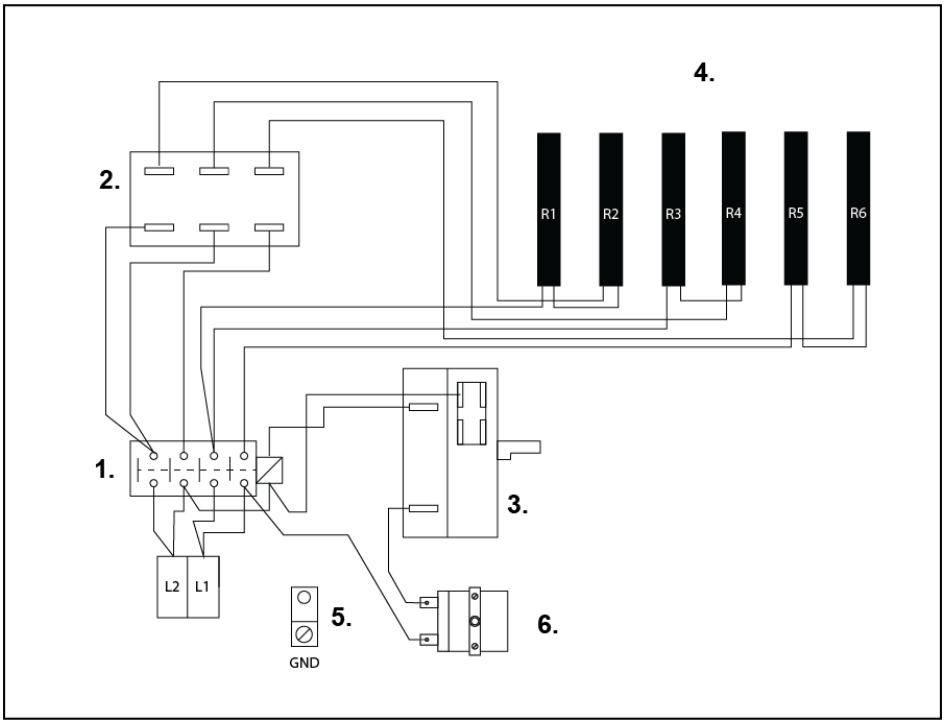

1= Contactor **2=** Thermostat **3=**Timer **4=**Heating elements **5=**Ground **6=** Overheating limit control

Resettable overheating fuse wiring diagram with a separate controller

Wiring diagram

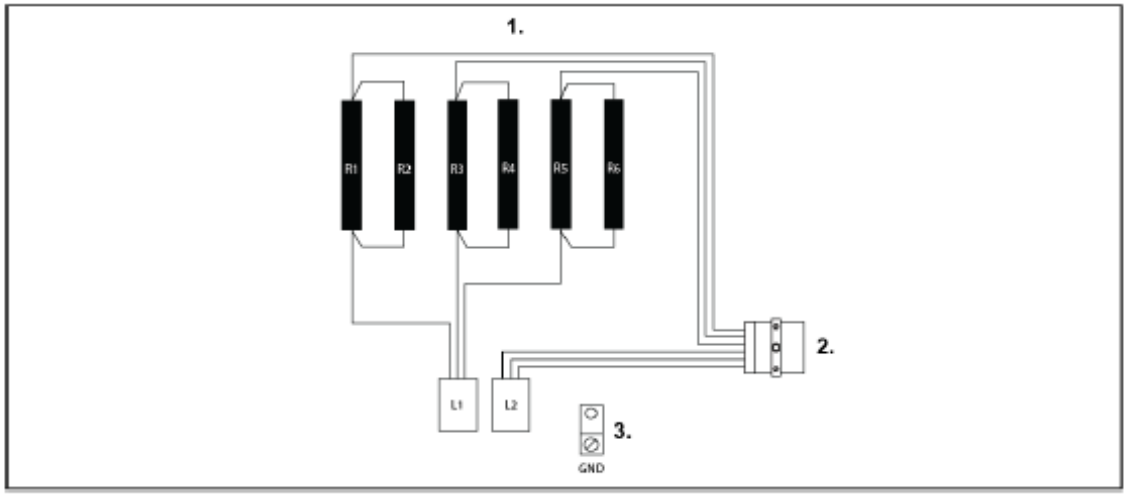

1= Heating elements 2= Overheating limit control 3=Ground

Supply wires

Heater model	Input kW	Voltage	Amps	Hz	Circuit breaker A	Wire Size AWG
Pillar IKI 6,6	6,6	240	28.75	60	30	10
Pillar IKI 9	9	240	37.5	60	40	6 or 8

All supply wire to be 90 °C copper.

Model table

	Size of sauna	Heater height	Heater diameter	Max. amount of stones	Power
Pillar IKI 6,6 kW	176-360 ft³	39.4 ’’ / 100 cm	13,4 ’’ / 34 cm	120 kg / 264 lb	6,6 kW
Pillar IKI 9 kW	282-565 ft³	43,3 ’’ / 110 cm	13,4 ’’ / 34 cm	130 kg / 286 lb	9 kW

Safety distances

Safety distances to inflammable materials (such as wall-paneling and sauna benches)

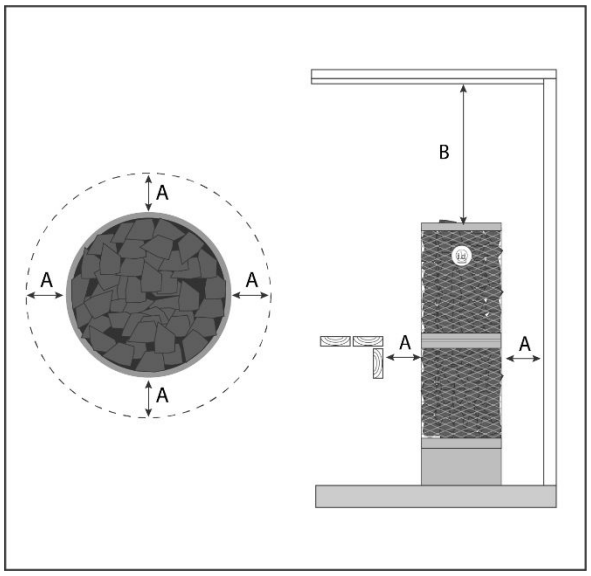

A:

Pillar IKI 6,6 kW	4 inches / 10 cm
Pillar IKI 9 kW	4 inches / 10 cm

B:

Pillar IKI 6,6 kW	35,4 inches / 90 cm
Pillar IKI 9 kW	35,4 inches / 90 cm

Supporting the heater against a wall

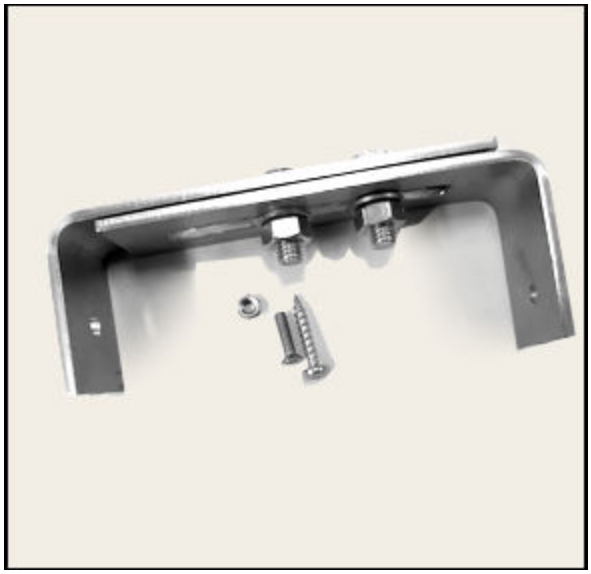

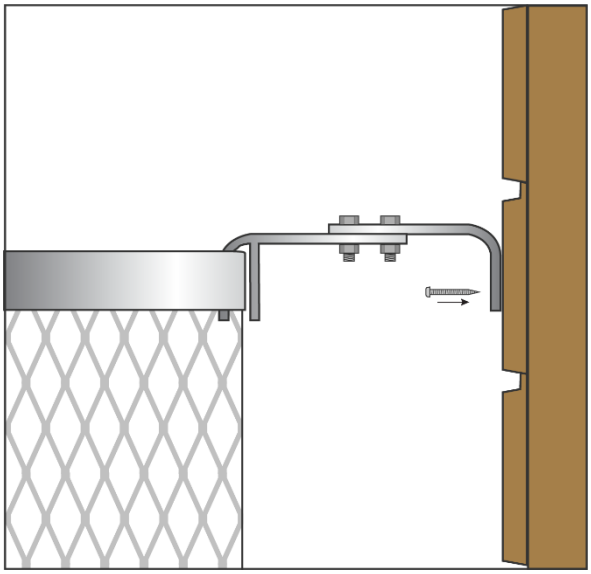

Operating the heater timer and temperature

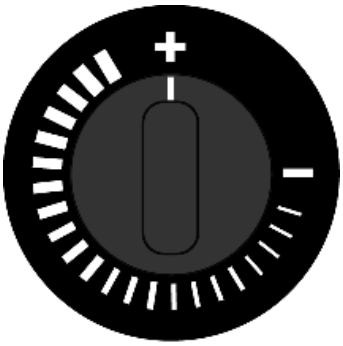

- The heater is equipped with the thermostat to adjust the sauna temperature and timer to control when the heating starts and and stops. it is prohibited to bypass the the timer or the thermostat.
- <u>To set the TEMPERATURE</u> in the sauna higher you can turn the thermostat knob clockwise (+) and to set the temperature lower turn the knob counter-clockwise (-).
- <u>To set the TIME</u> To turn the sauna on immediately turn the timer switch past the first market area 0-1hr. Then turn the dial back until you hear “click” sound. Then you have the heater turned on to 1hr operating zone and the heating elements start heating up. Heater will be then in operation for maximum 1 hr.
- The heater has “8+1hr” timer. That means that you can set the heater to begin heating after a delay of up to 8hrs. If you tun on the heater to “1-9hr” zone the heating will start automatically after the selected delay time has elapsed

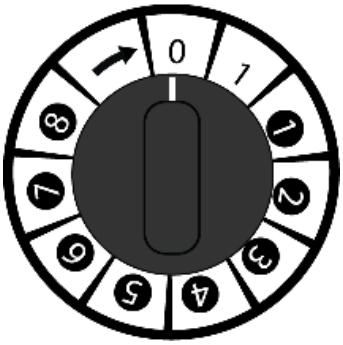

High temperature control (reset button)

- The heater has a build-in high limit control, which automatically will turn off the heater if the temperature rises too high in the sauna. That limit control might also turn off the heater in case the sauna stones have for some reason moved and exposed the heating elements. The elements should then be carefully covered with the stones.
- To restart the heater, turn the timer first down to zero and then push the reset button firmly. The button is located at the bottom part of the heater. If the heater will not start operating or continues to shut off, contact IKI LLC for further assistance.

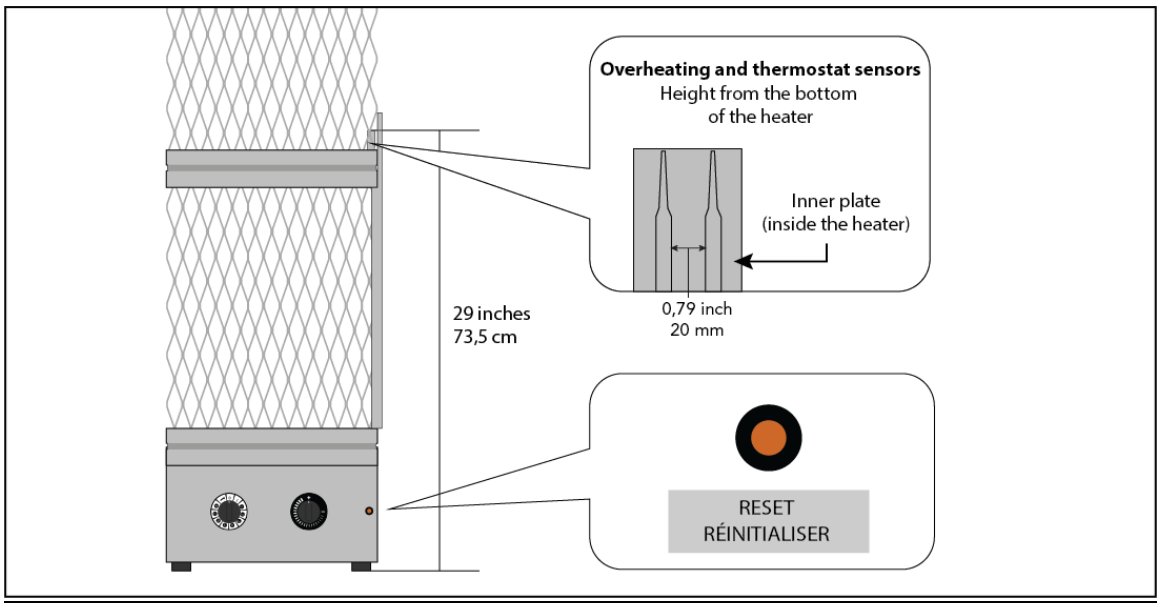

table 6. Requirements for water quality

Water type	Effect	Recommendation
Humus concentration	Color, taste, precipitates	<12 mg/l
Ferrous water	Color, smell, taste, precipitates	<0,2 mg/l
Hardness: most important substances are manganese (Mn) and lime, i.e. calcium (Ca)	Precipitates	Mn: <0,05 mg/l Ca: <100 mg/l
Chlorinated water	Risk to health	Forbidden
Seawater	Fast corrosion	Forbidden

Instructions for use and maintenance

- Before bathing for the first time, heat up the heater once to burn off the protective oil solvents from the heating elements. Be careful to ventilate the sauna during that and afterwards.
- Before switching the heater on always check that there is nothing flammable on top of the heater or inside the given safety distance
- The heating time of an IKI heater is approximately 60-75 minutes to get the saunastones ready for the appropriate temperature. This can vary depending on the starting temperature and the ventilation of the sauna room. Recommended bathing sauna temperature to enter the saunas with the IKI is approximately 131-167F (55-75C). Then by adding water to the heater you can increase the temperature to a preferred level.
- Pouring water on the heater increases temperature and humidity. You can control the heat and humidity by pouring the water to different parts of the heater. You can adjust the feel of the heat and steam from soft to sharp by throwing water either to the side of the heater or by pouring water on top of the stones at different places..
- Check that the heating elements do not become exposed as the stones shift about due to heat expansion. The stones settle normally in the first 10-20 times when heater is used.
- Check the condition of the stones at least once a year and replace if necessary. Rearrange the stones as advised in paragraph **(Page 7: Piling the stones)** once a year or even more often if the sauna is in frequent use. Replace any disintegrated stones with new ones. By doing this, the power output of the heater stays good and the risk of overheating is avoided.
- Do not throw water to the heater when there are people nearby: the steam coming off the heater is burning hot. This might burn their skin. Do not throw too much water on to the heater. Maximum amount is 12 ounces (0,5l). It is important to throw water on the heated stones to have a good and comfortable level of humidity in the sauna.
- The water to be thrown on the heated stones should meet the requirements of clean household water **(table 6).**
- After taking the (Löyly) in the sauna, cool your skin down as necessary and allow your heart rate to settle back to normal. Have a drink of fresh water or mineral water to help stabilize your fluid balance.

Troubleshooting

If the sauna room does not heat up, check that:

- The power is on and the circuit breakers are in working condition and are the correct size.
- The timer is set to the operating range.
- The temperature is set in a controller to a higher temperature than the temperature in the sauna room.
- The fuses are intact.
- The temperature restrictor (overheat protector) has not gone off. If temperature restrictor has gone off, the reason for this must be solved before using heater again.
- The stones are piled correctly, not too tightly packed.
- Check that all heating elements glow when the heater is on.
- Check that the heater output is sufficient **(Page 12: Model table)**
- Check that the sauna room ventilation has been arranged correctly.

If the sauna heats up but the stones not (= water goes through without generating steam)

• Turn the temperature lower from the controller
• Check that the heater output is not too high **(Page 12: Model table)**
• Check that the heater output is not too high **(Page 12: Model table)**
• Check that the sauna room ventilation has been arranged correctly

If the wood panel starts to darken around the heater

Check that the requirements for safety distances **(Page 12)** are fulfilled.
Too tightly piled stones and the settling of stones or wrong stone type can stop the smooth air flow through the heater. This might cause the overheating of surrounding materials. Check also that heating elements cannot be seen through the stones. If heating elements are visible, rearrange the stones immediately without further using the heater.

Other problems

If the heater makes noise, this can be caused by stones breaking due to heat and the thermal expansion of heater parts. This noise may be evident when the heater warms up.

Warranty

IKI LLC (the manufacturer) assures a warranty to its products as stipulated here, guaranteeing the quality and functionality of the products during the warranty period. The warranty requires that the buyer follow the instructions regarding the placement of the heater, its installation, use and maintenance as well as those regarding the qualities of the stones used in the heater. The length of the warranty period is 24 months from the day of purchase or from the day of purchase for private family use. The warranty period for spa saunas and other public-use saunas is 6 months or determined according to the frequency of use. Contact the manufacturer for more details.

The warranty for electric heaters requires that:

1. In case of defect or malfunction, the buyer must always contact the manufacturer or sales agent / retailer before searching for the cause or attempting to repair it. Any repairs must be agreed upon in writing with the manufacturer.
2. In private apartment use, the heater's stone space needs to be cleaned out and re-piled at least once a year and weathered stones need to be replaced with new ones.
3. In institutional or professional use, the heater's stones must be re-piled at least annually. If this is not done, the warranty ceases to apply. In addition, the stones must be changed to new ones at least once a year. Proof, such as the product's purchase receipt, must be presented at request. The use of ceramic heater stones (other than those form kerkes.fi) is prohibited.
4. The warranty does not cover dismantlement or reinstallation on sauna benches, removal of sauna stones nor re-piling them.
5. The warranty for replacement parts is 12 months from the day of purchase. The replacement for the damaged part will be delivered at manufacturers cost. The installation of the replacement part must be carried out by an licensed electrician. The guarantee does not cover the faulty part removal or repair costs on the field. If the heater is returned to the manufacturer or retailer within 2 years from the date of

purchase, the importer will provide free repair work, but may charge for spare parts if the warranty period has expired. The guarantee is void if installation and wiring has not been carried out by a licensed electrician or authorized and licensed service representative. The electricians or installers signature is needed below. The guarantee is not valid if the information below is not filled out and returned to the manufacturer or importer within 15 days of purchase. The warranty is limited to the first installation of the product and to the original buyer.

6 Limitations to warranty: The product owner must take good care of the product. On receiving the product, the owner is expected to check that it does not show signs of damage caused during shipping or storage. In case of such damage, they must contact the sales agent or transport company immediately. The manufacturer is not liable for any damages caused during shipping, or by inappropriate storage, installation or use against manufacturer's instructions, neglect of maintenance, or damage caused by placement of the heater in a place which does not meet the recommendations made by the manufacturer. Replacing any parts in the heater does not extend the original guarantee period.

7 Damage notifications: The owner is responsible for notifying the manufacturer, the sales agent, or manufacturer's authorized mechanic of any damage or malfunction as soon as it appears and within 14 days. Any warranty related claims must be submitted within 14 days from the closing date of the product's warranty period. The manufacturer is not liable for reimbursing any expenses, business loss or other direct or indirect harm occurred to the buyer from damages or malfunction.

Quality guarantee / Freight guarantee

Guarantee of materials. The manufacturer guarantees the durability of the stainless-steel parts (resistor platform and frame) in private home use for 10 years. During the warranty period any defects that appear in the heater's raw materials or are production-based will be repaired free of charge. For example, the use of seawater on the heater is forbidden. Read through the requirements for water quality in the installations instructions.
The warranty does not cover colour changes, slipping or hair-line fractures, characteristic to natural stones, which do not affect the use or the safety of the heater.

Damages occurred during shipping must be recorded in the waybill when the product is received or within 7 days of delivery. Shipping damage must also always be reported to the shipping company's last contact. The damaged part needs to be stored for inspection. Insurance compensates for the new part, which will be delivered by a public transporter. In all issues concerning warranty contact the store from where the product was purchased.

Warning placards

- There are 2 placards included in the shipment. CAUTION label must be installed visibly directly above the heater on the wall. WARNING placard must be attached to the door of the sauna.

Ventilation

The ventilation in the sauna room needs to be considered. Proper air-flow allows bathers to enjoy fresh, oxygen-rich air. The air should fully exchange 6 times an hour. The supply air inlet should be installed on the wall or the ceiling at about 20 inches (500 mm) above the heater. The supply air inlet vent should be 2-4 inches (50-100 mm) in diameter. The outlet vent should be located as far away from the heater as possible, close to the floor. The outlet vent should be twice the size of the inlet vent.

NOTE! The sensor for the thermostat should be located at a minimum of 39 inches (1000 mm) distance from undirected vent for replacement air, or minimum of 20 inches (500 mm) distance from the air vent directed away from the sensor.

Mechanical ventilation

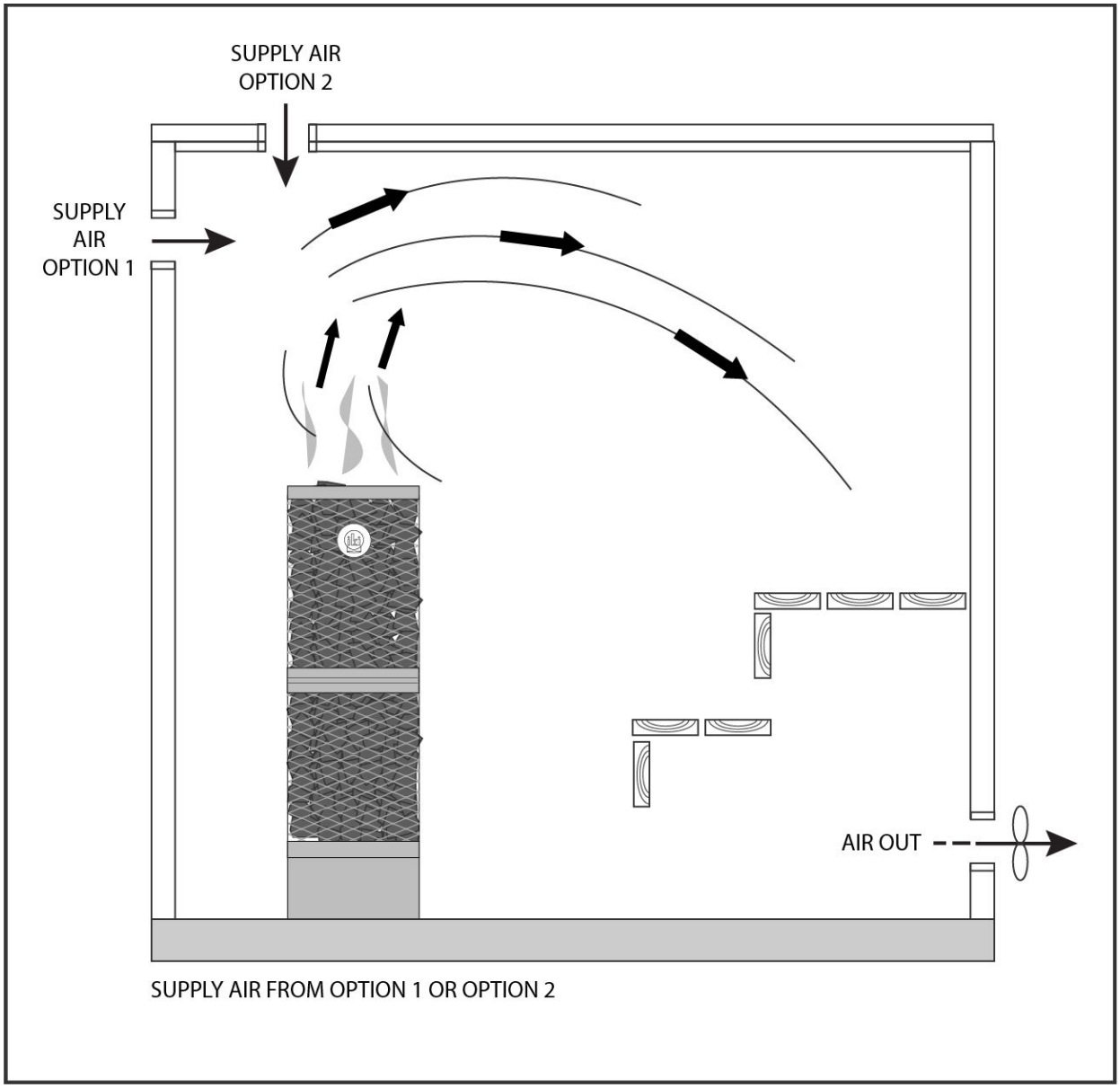

Gravity ventilation

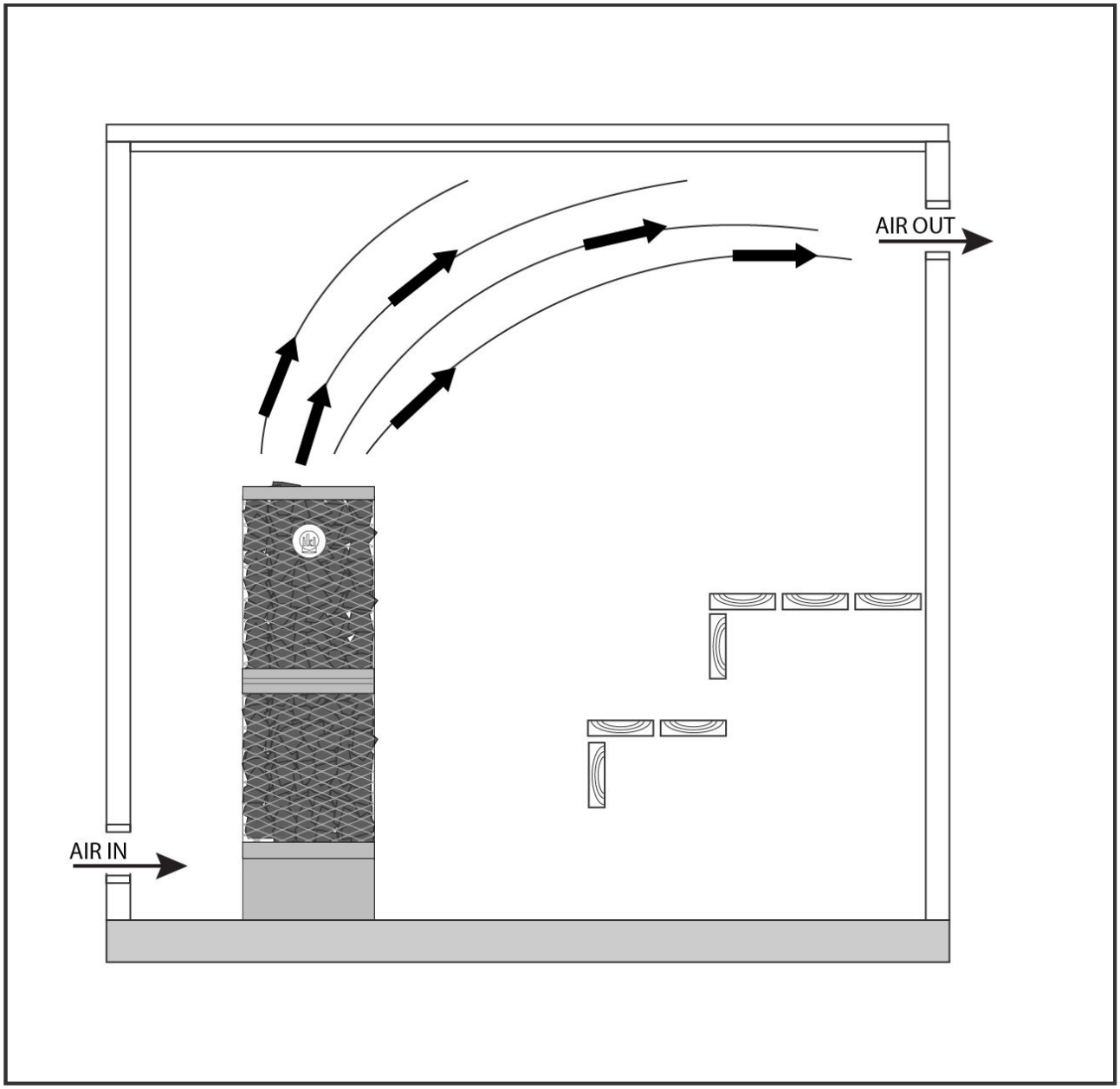

The Sauna Room

2.1. Insulation and Wall Materials of the Sauna Room

In an electrically heated sauna, all the massive wall surfaces which store plenty of heat (such as bricks, glass blocks, plaster etc.), must be sufficiently insulated in order to keep the heater output at a reasonably low level.

A wall and ceiling construction can be considered to have efficient thermal insulation if:

• the thickness of carefully fitted insulating wool inside the structure is 4” (100 mm) minimum 2” (50 mm).
• the moisture protection consists of e.g. aluminium paper with tightly taped edges. The paper must be fitted so that the glossy side is towards the inside of the sauna.
• there is a 1/4” (10 mm) vent gap between the moisture protection and panel board (recommendation).
• the inside is covered by 1/2” – 5/8” (12–16 mm) thick panelling.
• there is a vent gap of a few millimetres at the top of the wall covering at the edge of the ceiling panelling.

When aiming at a reasonable heater output, it may be advisable to lower the ceiling of the sauna, (minimum height 75” (1900 mm)). As a result, the volume of the sauna is decreased, and a smaller heater output may be sufficient. The ceiling can be lowered so that the ceiling joists are fixed at a suitable height. The spaces between the joists are insulated (minimum insulation 4” (100 mm)) and surfaced as described above. Because heat goes upwards, a maximum distance of 47” (1200 mm) is recommended between the bench and ceiling.

NOTE! The protection of the walls or ceiling with heat protection, such as mineral board fitted directly on the wall or ceiling, may cause the temperature of the wall and ceiling materials to rise dangerously high.

2.1.1. Room construction – general information

FRAMING
2” x 4” (50 x 100 mm) any suitable wood material, 16” (406 mm) o.c.

CEILING HEIGHT
No higher than 7’ 6” (2300 mm).

INSULATION
R11 Fiberglas with foil back in walls and ceiling, foil facing into room.

DRYWALL
See local codes. Is not required in most residences. See local codes for commercial. If drywall is used apply 1” x 2” (25 x 50 mm) nailers so that wall and ceiling boards can be attached to solid wood.

PANELING
Use kiln-dried softwood (with moisture content not exceeding 11 %).

BENCHES
Use matching softwood. Fasten from bottom to prevent burning of bathers.

DOOR
Must open out and should not have a lock. Types of door fastenings that may be used are magnetic catches, friction catches, spring-loaded or gravity loaded door closers, and the like.

ROOM LIGHT
Should be a vapor proof, wall mounted type, with rough-in box mounted flush with inside paneling. It should be mounted 6'' (150 mm) from ceiling, not directly over the sauna heater, and not over upper benches. It could be installed under benches. Light bulb should not exceed recommended watts of the light manufacturer. **Note!** Receptacles OR PLUGS are not allowed in a Sauna room. If a speaker is installed in a Sauna room, it should not be installed higher than 3' (914 mm) from floor, away from the Sauna heater (consult manufacturer for ratings).

2.1.2. Darkening of the Sauna Walls

It is perfectly normal for the wooden surfaces of the sauna room to darken in time. The darkening may be accelerated by
• sunlight
• heat from the heater
• protective agents on the walls (protective agents have a poor heat resistance level)

2.2. Sauna Room Floor

Due to a large variation in temperature, the sauna stones disintegrate in use. Small pieces of stone are washed down on the sauna room floor along with the water thrown on the rocks. To prevent aesthetic damage only dark joint grouts and floor coverings made of rock materials should be used underneath and near the heater.

2.3. Heater Output

When the walls and ceiling are covered with panels, and the insulation behind the panels is sufficient to prevent thermal flow into the wall materials, the heater output is defined according to the cubic volume of the sauna. Because log walls are heated slowly, the cubic volume of a log sauna should be multiplied by 1.5, and the heater output should then be selected on the basis of this information.

2.4. Sauna Room Ventilation

Should be provided by lower vent close to heater, 4" (100 mm) from floor, and upper vent on opposite wall (if possible) 6" (150 mm) from ceiling or as low as 24" (600 mm) from floor. Vents should be adjustable and should allow air to change 5 times per hour. Sauna shall be provieded with intended ventilation as required per the local code authorities.

2.5. Hygienic Conditions of the Sauna Room

Good hygienic standards of the sauna room will make bathing a pleasant experience. The use of sauna seat towels is recommended to prevent sweat from flowing onto the platforms. The towels should be washed after each use. Separate towels should be provided for guests. It is advisable to vacuum or sweep the floor of the sauna room in connection with cleaning. In addition, the floor may be wiped with a damp cloth. The sauna room should be thoroughly washed at least every six months. Brush the walls, platforms and floor by using a scrubbing-brush and sauna cleanser. Then rinse the saunaroom by using clean household water. Remove lime stains from the heater using a 10% citric acid solution and rinse. Wipe dust and dirt from the heater with a damp cloth.

Copyright IKI LLC | We reserve the right to changes.